# X34-150LT-830/U

General purpose lighting that's pocket friendly.

Color: Bronze

Weight: 10.1 lbs

| Project: | Type: |
|---|---|
| Prepared By: | Date: |

### Driver Info

| | |
|---|---|
| Type | Constant Current |
| 120V | 1.1A |
| 208V | 0.6A |
| 240V | 0.6A |
| 277V | 0.5A |
| Input Watts | 130.40W |

### LED Info

| | |
|---|---|
| Watts | 130W |
| Color Temp | 3000K (Warm) |
| Color Accuracy | 82 CRI |
| L70 Lifespan | 50,000 |
| Lumens | 16,152 |
| Efficacy | 123.9 LPW |

## Technical Specifications

### Listings

**UL Listed:**

Suitable for wet locations. Suitable for ground mounting.

**IESNA LM-79 & LM-80 Testing:**

RAB LED luminaires and LED components have been tested by an independent laboratory in accordance with IESNA LM-79 and LM-80.

**DLC Listed:**

This product is on the Design Lights Consortium (DLC) Qualified Products List and is eligible for rebates from DLC Member Utilities. DLC Product Code: PZTACHRP

### Electrical

**Driver:**

Constant Current, 120-277V, 50/60 Hz, 120V: 1.1A, 208V: 0.6A, 240V: 0.6A, 277V: 0.5A

**Dimming Driver:**

Driver includes wiring for 0-10V dimming systems. Dim as low as 10%.

**THD:**

5.2% at 120V, 8.3% at 277V

**Power Factor:**

99.7% at 120V, 96.1% at 277V

**Note:**

All values are typical (tolerance +/- 10%)

### Optical

**NEMA Type:**

NEMA Beam Spread of 7H x 7V

### LED Characteristics

**LEDs:**

Long-life, high-efficacy, surface-mount LEDs

**Lifespan:**

50,000-hour LED lifespan based on IES LM-80 results and TM-21 calculations

**Color Uniformity:**

RAB's range of Correlated Color Temperature follows the guidelines of the American National Standard for Specifications for the Chromaticity of Solid State Lighting (SSL) Products, ANSI C78.377-2017.

### Construction

**IP Rating:**

Ingress Protection rating of IP65 for dust and water

**EPA:**

1.1

**Cold Weather Starting:**

Minimum starting temperature is -40°C (-40°F)

**Maximum Ambient Temperature:**

Suitable for use in 40°C (104°F)

**Housing:**

Precision die-cast aluminum

**Mounting:**

Trunnion with tilt angle in 30° increments

**Lens:**

Tempered glass

**Finish:**

Formulated for high durability and long-lasting color


Copyright © 2020 RAB Lighting All Rights Reserved Note: Specifications are subject to change at any time without notice

## Technical Specifications (continued)

### Construction

**Green Technology:**

Mercury and UV free. RoHS-compliant components.

### Other

**5 Yr Limited Warranty:**

The RAB 5-year, limited warranty covers light output, driver performance and paint finish. RAB's warranty is subject to all terms and conditions found at rablighting.com/warranty.

**Buy American Act Compliance:**

RAB values USA manufacturing! Upon request, RAB may be able to manufacture this product to be compliant with the Buy American Act (BAA). Please contact customer service to request a quote for the product to be made BAA compliant.

## Dimensions

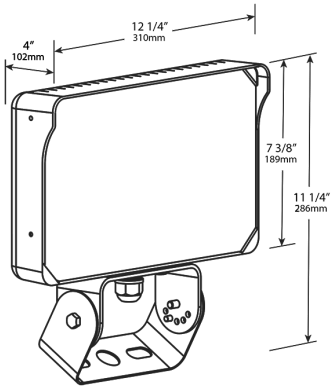


## Features

- Versatile, general-purpose floodlight
- 7H x 7V NEMA distribution
- 0-10V dimming
- IP65 rating protects against dust and water
- 50,000-Hour LED lifespan

## Ordering Matrix

| Family | | Lumen Packages (values are nominal) | Mounting | CRI/Color Temp | Driver/Voltage |
|---|---|---|---|---|---|
| X34 | – | 150L | T | -830 | /U |
| | | **100L =** 10,000 Lumens, 87W<br>**150L =** 15,000 Lumens, 130W<br>**195L =** 19,500 Lumens, 160W | **SF =** Slipfitter<br>**T =** Trunnion | **Blank =** 80 CRI, 5000K<br>**-830 =** 80 CRI, 3000K | **/U =** 120-277V, 0-10V Dimming |


Copyright © 2020 RAB Lighting All Rights Reserved Note: Specifications are subject to change at any time without notice