GRAFIK Eye QS Wireless Control Unit with EcoSystem

GRAFIK Eye QS Wireless with EcoSystem is the premier energy-saving lighting and shade control. The GRAFIK Eye QS control unit features an astronomic timeclock and intuitive lighting presets, which are seamlessly integrated with EcoSystem LED drivers and Lutron's QS components and systems. Now with wireless technology and an integral EcoSystem bus supply, you can choose to use the phase control outputs to control screw in LED bulbs, or use EcoSystem to control LED drivers and shades without interfaces. You can also integrate with a variety of Lutron wireless products and systems, including Radio Powr Savr occupancy, vacancy, and daylight sensors, Sivoia QS wireless shades, Pico wireless controls, and other GRAFIK Eye QS wireless control units. Additionally, the GRAFIK Eye QS wireless control unit is compatible with all Lutron wired QS products and systems, including Quantum.

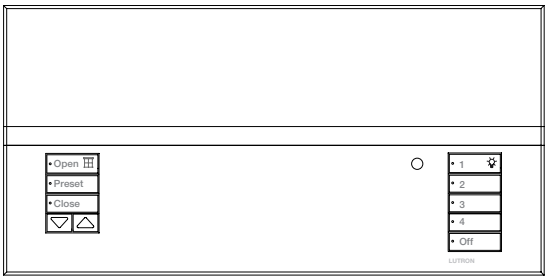

Mechanical Dimensions

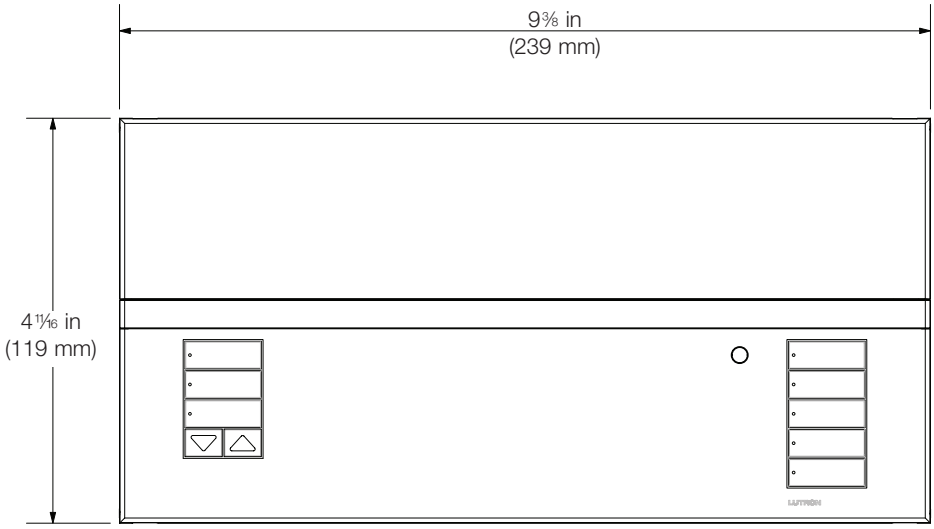

Front View

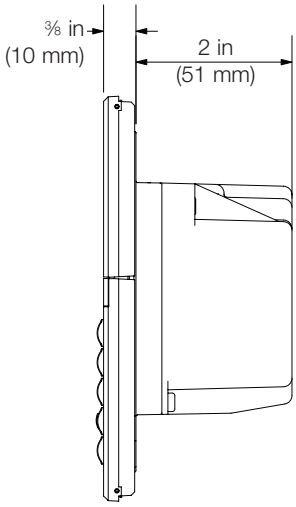

Side View

Fits into a 4-gang U.S. backbox, 3½ in (90.4 mm) deep (Lutron P/N 245254) or 3 in (76.2 mm) deep (Lutron P/N 241400)

Job Name:	Model Numbers:	
Job Number:		

System Topologies

The GRAFIK Eye QS Wireless control unit with EcoSystem can be specified in three different system topologies. Examples of each are shown below.

Example of Wired System

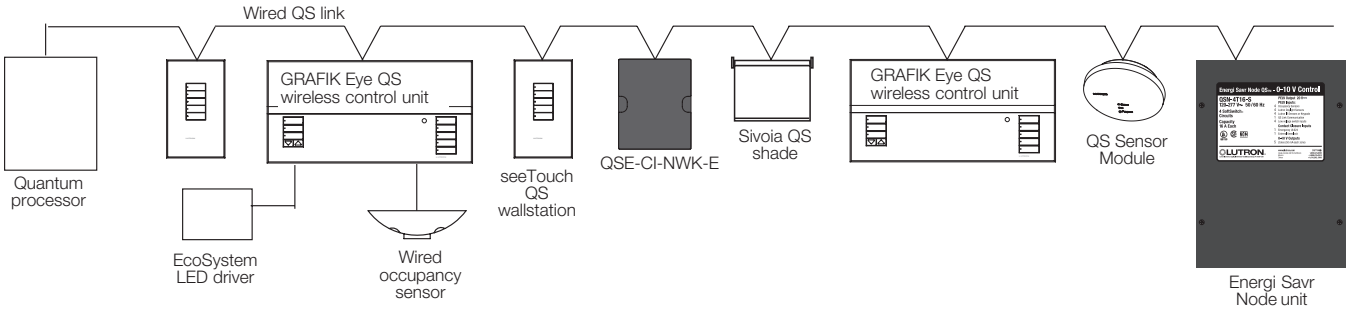

Example of GRAFIK Eye-centric Wireless System

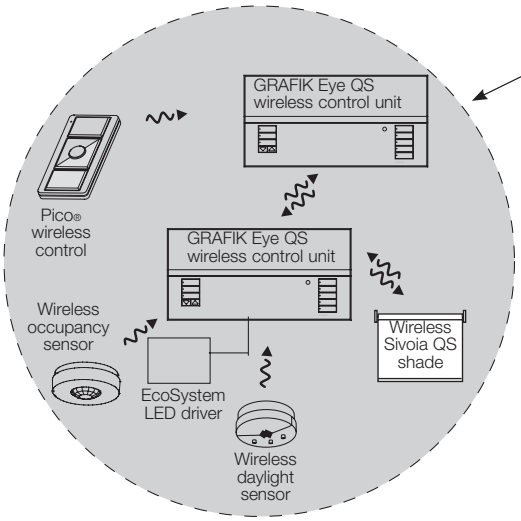

30 ft (10 m) wireless range; 60 ft (20 m) in open air

Example of Mixed GRAFIK Eye-centric Wired/Wireless System

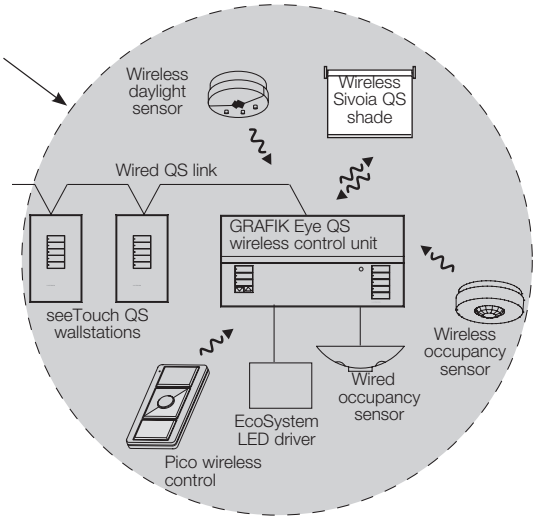

Job Name:	Model Numbers:	
Job Number:		

Application Suggestions and Differences between GRAFIK Eye QS with EcoSystem Control Unit and Energi Savr Node with EcoSystem Unit

	GRAFIK Eye QS with EcoSystem GRAFIK Eye QS with EcoSystem control unit	Energi Savr Node (ESN) with EcoSystem 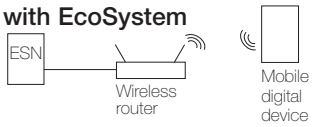
Suggested / Recommended Applications	**Single rooms, partitioned spaces, e.g., conference room, classroom, ballroom, lobby**	**Open spaces, multiple enclosed rooms, e.g., open office, window offices**
Programming Method	Info Screen on the QS control unit	Via Energi Savr Node App
Integral Timeclock	Yes	Yes (using a QS Timeclock or contact closure interface)
Compatible with seeTouch QS Keypads	Yes	Yes
Compatible with EcoSystem Wall Controls	No	Yes
Compatible with EcoSystem IR Sensors	No	Yes
Includes dry contact closure for integration to BMS or Security Systems	Yes	Yes
Input Voltage	120–127 or 220-240 V∼ 50/60 Hz	120/240/277 V∼ 50/60 Hz
Number of EcoSystem Busses	1	1 or 2
Number of Zones	6, 8, or 16	Programmable (maximum 100)
Number of Line-Voltage Outputs	3 (Zones 1-3 only)	--
Compatible with other QS Devices	Yes	Yes

Job Name:	Model Numbers:	
Job Number:		

Features

- Lutron's proprietary Clear Connect RF technology. Operates in the 434 MHz band.
- Pushbutton recall of four preset lighting scenes, plus Off.
- Sixteen (16) total available scenes, plus Off scene.
- Zones 1, 2, and 3 can control many light source types directly or through power modules.
- Optional integrated shade control buttons, which can also be added to the unit after installation.
- Master override buttons to raise and lower all lights.
- Allows setup of lighting scenes and shade presets using buttons on the control unit.
- Built-in infrared (IR) receiver.
- External IR connection.
- Built-in astronomic timeclock.
- Info screen shows zone light level percentage, energy savings, zone labeling, programming, and EcoSystem setup.
- Lockout option prevents accidental changes.
- Occupancy sensor input and 24 V⎓ power for one occupancy sensor.
- QS communication link for seamless integration of lights, motorized window treatments, occupancy sensors, wallstations, and integration interfaces.
- Compatible with all Lutron QS system components.
- Wireless communication for seamless integration with a variety of Lutron wireless products and systems, including Radio Powr Savr occupancy, vacancy, and daylight sensors, Sivoia QS wireless shades, Pico wireless controls, and other GRAFIK Eye QS Wireless control units.
- Control up to 6, 8, or 16 EcoSystem zones from internal bus supply.
- Zones 1, 2, and 3 are integral line voltage dimming zones and can be optionally programmed as EcoSystem zones.
- Up to 64 EcoSystem or Hi-lume LED drivers can be addressed and grouped to zones.
- Integral EcoSystem setup and programming through the info screen.
- Backlit buttons with engraving make unit easy to locate and operate.
- Available in a variety of colors and finishes.

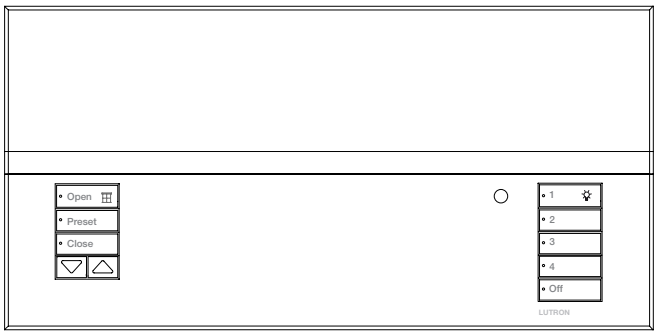

Note: General Engraving (-EGN) shown.

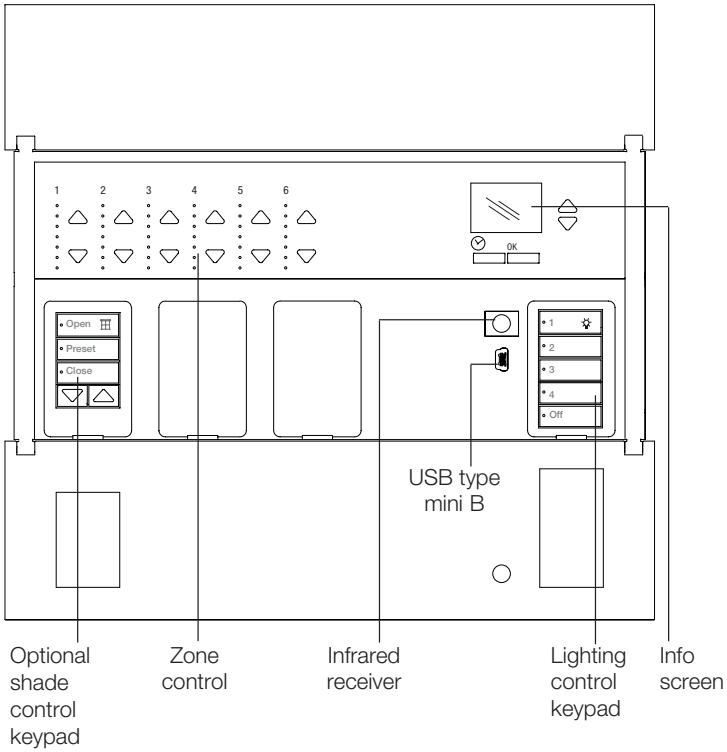

Job Name:	Model Numbers:
Job Number:	

Specifications

Input Power

- 120–127 V∼ 50/60 Hz
- 220–240 V∼ 50/60 Hz

Listings (120–127 V∼)

- UL® Listed
- CSA
- NOM
- CEC (Title 24)
- FCC Part 15 Class B
- IC RSS-210
- SCT

Environment

- 32 to 104 °F (0 to 40 °C)
- Relative humidity less than 90% non-condensing

Lighting Sources/Load Types

All Zones

- Hi-lume and 5-series LED drivers directly wired to integral EcoSystem digital link
- Before system is addressed, Zone 4 will transmit broadcast commands to all EcoSystem loads wired to the GRAFIK Eye QS.
- Zones on Energi Savr Node products wired to the same QS link
  – Zones on Energi Savr Node with Softswitch
  – Zones on Energi Savr Node for 0-10 V
  – Zones on Energi Savr Node with EcoSystem
  Please refer to “Remote Zone Mapping” for important information.
- DMX channel(s) through DMX output interface (QSE-CI-DMX). Please refer to “Accessory Controls: DMX Output Interface”

Zones 1, 2, and 3 can also control the following lighting sources with a smooth, continuous square law dimming curve or on a full conduction non-dim basis:

- Dimmable LED Bulbs (for a complete list of approved dimmable LEDs please call 1.800.523.9466 or visit www.lutron.com/dimcflled)
- Cree LR4/6, 120 V∼ fixtures (for loading capacities, please refer to the LED report card located at www.lutron.com/LEDtool)
- Incandescent
- Halogen
- Magnetic low-voltage transformer
- Lutron Tu-Wire electronic fluorescent dimming ballast
- Lutron Hi-lume 2-wire LTE LED driver
- Advance Mark 10® electronic dimming ballast
- Neon and cold cathode
- Non-dim (incandescent, magnetic low-voltage, Tu-Wire, or neon/cold cathode)
  Please refer to “Capacities” for more information.

Zones 1, 2, and 3 can also control the following lighting sources with a smooth, continuous square law dimming curve or on a full conduction non-dim basis through separate Lutron power modules:

- Electronic low-voltage transformers (use ELV or Phase-Adaptive power module)
- Lutron 3-wire controlled electronic fluorescent dimming ballasts (use fluorescent 3-wire power module)
- Lutron 3-wire controlled LED drivers (use flourescent 3-wire power module)
- Non-dim (use switching module)
- 0–10 V (use TVI)

Note: A zone may be programmed to control only one load type at a time.

Key Design Features

- RF meets FCC Part 15 Class B.
- Lightning strike protection meets ANSI/IEEE standard 62.41-1980. Can withstand voltage surges of up to 6000 V∼ and current surges of up to 3000 A.
- Tested to withstand 16 kV electrostatic discharge without damage or memory loss.
- RTISS Equipped: Compensates in real time for incoming line voltage variations (no visible flicker with +/-2% change in RMS voltage per cycle, and +/-2% Hz change in frequency per second).
- Power failure memory retains programming and light level settings for up to 10 years in the event of a power loss.
- The GRAFIK Eye QS control unit supplies 3 Power Draw Units (PDUs) on the QS link.
  For complete information, see the **Power Draw Units on the QS Link** Spec (369405) on www.lutron.com
- Faceplate is hinged at the top and bottom, and stays open at 180° for ease of access.
- Direct control of 120 V∼ and 277 V∼ EcoSystem, Hi-lume 3D, and Hi-lume LED ballasts (no interface required).

Job Name:	Model Numbers:
Job Number:	

Specifications *(continued)*

Scene and Shade Buttons

- Large, rounded buttons are easy to use.
- Backlit buttons with optional engraving make it easy to find and to operate the control unit in low light conditions (backlight can be disabled).
- Optional button engraving is angled up to the eye for easy reading.
- Predefined label stickers are included for field labeling.
- 4 preset lighting scenes, plus Off, are accessible from the front of the control unit.
- 12 additional scenes are stored in the control unit and are accessible from the integral timeclock, seeTouch QS wallstations, and QS interfaces.
- Light levels fade smoothly between scenes. Fade time can be set differently for each scene: 0 to 59 seconds, or 1 to 60 minutes. Maximum fade time from Scene Off is 3 seconds.

Shade Control

- The GRAFIK Eye QS control unit can include up to 3 shade button columns. Each column has backlit open, preset, close, and raise/lower buttons.
- Each shade button column can be programmed to operate one shade or a group of shades. (Shades may be assigned to more than one shade button column).
- Faceplates are available with 1, 2 and 3 shade button columns.

Wireless shade limitations:

- Access to the Sivoia QS Wireless electronic drive unit (EDU) is required to associate shades with the GRAFIK Eye QS control unit and set their raise/lower limits. Exception: Sivoia QS Wireless cellular shades allow limit setting from the GRAFIK Eye QS wireless control unit.
- Wired and wireless shades may not be programmed into the same shade button column; however, both may be used on the same GRAFIK Eye QS control unit.
- Scene commands that affect wireless shades across multiple shade button columns will have a 1-second delay from column to column. This does not occur in RadioRA 2 systems.

Zone Control

- Each zone has a dedicated raise and lower button to adjust the zone.
- Each zone has a dedicated 7 LED bar graph for level status. Percentage of light level and energy saved is displayed on the info screen.
- All zone information has blue backlit LEDs. Backlight turns off when idle for 30 seconds.
- High-end and low-end trim settings are adjustable per zone (high end from 99 to 55%; low end from 45 to 1%).
  Note: Trim for remote zones must be adjusted locally on the Energi Savr Node unit.
- Each zone is programmable to only one load type at a time.

Info Screen

- OLED (organic LED) screen is viewable from all angles.
- Screen turns off when idle for 30 seconds.
- Programmable zone labels.
- Programmable scene labels.
- Status of real-time zone percentage and energy savings.
- Programmable timeclock schedules.
- Programmable shade labels.
- Selectable display languages:
  - English - Spanish - French
  - Italian - German - Portuguese

Astronomic Timeclock

- Integral to all units.
- 7 daily schedules available.
- One available holiday schedule is programmable by date up to one year in advance.
- 25 events per day maximum.
- Timeclock events are programmable to control scenes that affect any Energi Savr Node unit connected on the QS link without changing the local scene on the GRAFIK Eye QS control unit.
- Astronomic times are programmable by integral city database or by entering latitude and longitude. Sunrise/Sunset times automatically adjust throughout the year based on location.
- Automatically adjusts for Daylight Saving Time (DST); DST is programmable.
- Local timeclock events can activate any of the following features:
  - Scenes 1 to 16 and Off
  - Any available shade presets
  - Start and End afterhours mode
  - Enable and Disable daylighting for all zones/groups
  - Enable and Disable occupancy for occupancy/vacancy sensors
  - Enable and Disable occupied events for all occupancy sensors

Job Name:	Model Numbers:
Job Number:	

Specifications *(continued)*

System Communications and Capacities

- Low-voltage type IEC PELV/NEC® Class 2 wiring connects control units, wallstations, motorized shades, and control interfaces.
- A QS system can have up to 100 devices and 100 zones.
- A QS system can have up to 30 wireless devices.
- Class 1/Class 2 wiring connects ballast to control unit.

Infrared

- Infrared (IR) receiver allows infrared transmitters to select 8 scenes, raise/lower lighting zones, or raise/lower shades.
- Transmitter buttons imitate buttons on faceplate.
- 50 ft (15 m) line of sight range.
- Terminal block infrared input for connection to a wired IR input from third-party equipment.
- IR can be disabled via programming.
- Works with Lutron GRX-IT and GRX-8IT infrared remote controls.

Accessory Controls: seeTouch QS Wallstations (QSWS2)

- Wired seeTouch QS keypads provide the following features:
  - Access to one or more of the 16 scenes on the GRAFIK Eye QS Wireless control unit
  - Zone toggle, partitioning, sequencing, fine tune, panic mode, and timeclock enable/disable
  - Contact closure inputs
  - Various other functions that are available on specific wallstation configurations. Refer to the seeTouch specification submittal.

Wireless RF Compatibility

- Lutron's proprietary Clear Connect RF Technology
- Operates in the 434 MHz band
- Compatible with other Lutron wireless products/systems, such as:
  - Pico wireless control (P/N PJ-)
  - Radio Powr Savr occupancy/vacancy/daylight sensors (P/N LRF2-)
  - Sivoia QS wireless products
  - Other GRAFIK Eye QS wireless control units (P/N QSGRJ-)

Accessory Controls: Pico Wireless Control (PJ models)

- The Pico wireless control is battery powered. It can control GRAFIK Eye QS wireless control units within a 30 ft (10 m) range (60 ft/20 m in open air). It provides the following features:
  - Control of one or more zones on the GRAFIK Eye QS Wireless control unit: turns zone(s) on or off, raises/lowers zone(s), allows programmable light levels for each button, and goes to user-programmable preset level
  - Control of one or more scenes on the GRAFIK Eye QS Wireless control unit: the Pico wireless control can access any three sequential scenes (1 through 16), or any two sequential scenes and Off; and can raise and lower lighting levels.

  Note: "Unaffected" is not a valid level for Pico zone programming.

Accessory Controls: QS Sensor Module (QSM2)

- The QS Sensor Module provides a means to link wired or wireless occupancy sensors or daylight sensors, Pico controls, and wired infrared sensors to a GRAFIK Eye QS control unit via the wired QS link.
  - Occupancy sensors wired (or wirelessly linked) to a QS Sensor Module can be used by one or more GRAFIK Eye QS control units on the wired link.
  - Daylight sensors wired (or wirelessly linked) to a QS Sensor Module can be used by one or more GRAFIK Eye QS control units on the wired link.
  - Pico wireless controls can control either one or more zones or scenes on the GRAFIK Eye QS control unit.
  - Pico wired controls can be used, when connected to a QS Sensor Module, to control one or more zones or scenes on the GRAFIK Eye QS control unit.
  - Infrared sensors can control either one or more zones or scenes on the GRAFIK Eye QS control unit. Functionality varies; refer to the documentation for the QS Sensor Module for details.

Job Name:	Model Numbers:
Job Number:	

Specifications *(continued)*

Accessory Controls: Contact Closure Input/Output Interface (QSE-IO)

- Recalls preset light levels for the following set of scenes on the GRAFIK Eye QS control unit:
  Scenes 1-4 and Off Scenes 9-12 and Off
  Scenes 5-8 and Off Scenes 13-16 and Off
- Sequence scenes 5-16, Enable/Disable Zone Lockout, Enable/Disable Scene Lockout, Enable/Disable Panic Mode, Enable/Disable Timeclock.
- Occupancy Sensors. An individual input counts as 1 occupancy sensor for the GRAFIK Eye QS control unit. Each input can be assigned to either Scene Control or Zone Control (please refer to the Occupancy Sensor(s) section of this guide).
- Zone Toggle. Allows an input to toggle one or more zones between programmable preset level(s) and off.
- Shade Output mode. A Shade Column on the GRAFIK Eye QS control unit can be linked to control outputs 1-3 and/or outputs 4-5 on the QSE-IO.

Accessory Controls: DMX Output Interface (QSE-CI-DMX)

- Any zone on the GRAFIK Eye QS control unit can be mapped to any single DMX512 Channel.
- Any zone on the GRAFIK Eye QS control unit can be simultaneously mapped to any three DMX512 channels (providing RGB/CMY control).
- DMX loads cannot be used with daylighting.

Accessory Controls: Ethernet and RS232 Interface (QSE-CI-NWK-E)

- Allows for monitoring and control of the outputs and local scenes of the GRAFIK Eye QS control unit.

Accessory Controls: QS Keyswitch Wallstations (QSWS2-KS)

- Recalls preset light levels for any two scenes including Off
- Allows fine-tuning (raise/lower level) of a zone or group of zones
- Starts/Stops scene sequencing (Scenes 1-4 or Scenes 5-16)
- Enables/Disables Timeclock
- Enables/Disables occupancy sensors
- Enables/Disabled daylight sensors
- Allows toggle of Zone(s) to a preset level and off
- Enables/Disables panic mode
- Starts/Stops afterhours mode

EcoSystem Ballasts and Devices

- Supports all Hi-lume and 5-Series LED drivers (maximum 64 per GRAFIK Eye control unit)
- Supports all EcoSystem ballasts (maximum of 64 ballasts per GRAFIK Eye control unit)
- Supports occupancy and daylight sensors wired to a ballast
- Does NOT support IR sensors (or IR keypads) wired to the ballast

Other Accessory Controls and Devices

- Energi Savr Node QS (ESN). Refer to the Specification Submittal for complete details.

Occupancy Sensor(s)

- The GRAFIK Eye QS control unit works with occupancy sensors through either:
  - Scene Control: Up to 16 sensors activate user-selected occupancy and vacancy scenes.*
  - Zone Control: Up to 4 sensors per zone activate user-selected occupancy and vacancy zone levels.
- Occupancy sensors may include:
  - Contact closure sensors wired to CCI input on back of GRAFIK Eye QS control unit
  - Wireless Radio Powr Savr occupancy or vacancy sensors (model numbers starting with LRF2)
  - Wired sensors connected to EcoSystem ballasts or interfaces
  - Wired or wireless sensors connected to a QS Sensor Module (QSM)
- If any sensor in a group detects occupancy, then the GRAFIK Eye QS control unit will go to the designated occupancy scene or zone level.
- If all sensors in a group detect vacancy, then the GRAFIK Eye QS control unit will go to the designated vacancy scene or zone level.
- Low battery: the Diagnostics screen will display a low battery symbol when applicable.
- If the GRAFIK Eye QS control unit does not receive a signal from an occupancy sensor on the link (usually due to a dead battery), the lights associated with that sensor will go to the occupied level.

* Applicable only to units that ship with firmware version 9.002 and higher. Previous versions support up to 4 sensors.

Job Name:	Model Numbers:
Job Number:	

Specifications *(continued)*

Daylight Sensor(s)

- The GRAFIK Eye QS control unit with EcoSystem works with compatible daylight sensors to adjust electric light levels based on measured daylight levels. Sensors can be configured to control either GRAFIK Eye QS zones or groups of EcoSystem loads independent of zoning.
- Daylight sensors may include:
  - Wireless Radio Powr Savr (model numbers starting with LRF2)
  - Wired sensors connected to EcoSystem ballasts or interfaces
  - Wired or wireless sensors connected to a QS sensor module (QSM)
- In Zone Mode, a daylight sensor can control one or more GRAFIK Eye QS zones. Each zone can be calibrated to target light levels.
  - A zone can be controlled by no more than one daylight sensor
- In Group Mode, a daylight sensor can control one or more EcoSystem loads, regardless of how they are zoned on the GRAFIK Eye QS control unit.
  - A group can be controlled by a single daylight sensor
  - Each group can be calibrated to independent target light levels
  - Up to 16 groups are available
- Daylight control can be enabled or disabled on a scene-by-scene basis
  - By default, daylight control is enabled in all scenes

Note: Daylight control through the GRAFIK Eye QS control unit only affects select lighting loads. Shade groups cannot be controlled by daylight sensors. Daylighting does not affect DMX or RGB/CMY DMX loads. Daylighting of Remote Zones linked to Energi Savr Node zones must be configured at the Energi Savr Node unit or through the Energi Savr Node app for *iPod*.

Contact Closure Input (CCI) with Power Supply Output

- Each GRAFIK Eye QS control unit has one contact closure input (Terminal A).
  - The attached device must provide a dry contact closure or solid-state output.
  - Input is miswire-protected up to 36 V⎓.
- The contact closure is capable of accepting the following types of inputs:
  - Maintained (default): The GRAFIK Eye QS control unit will act on both a contact closure and a contact open/release event.
  - Momentary: The GRAFIK Eye QS control unit will act on only contact closure events.
- Each GRAFIK Eye QS control unit can supply 50 mA maximum at 24 V⎓.
  - Useful for powering occupancy sensors.
  - An auxiliary power supply must be used if the device requires more than 50 mA.
- The CCI is capable of operating in the following modes
  - Occupancy: If an occupancy sensor is wired directly to the GRAFIK Eye QS control unit.
  - Emergency: This setting allows the GRAFIK Eye QS control unit to work with a LUT-ELI. When an emergency situation is detected, all lights will go to full on, and no operations will be allowed until the emergency signal is cleared.
  - Afterhours: Allows the CCI to start and end the afterhours mode.
  - Timeclock: Allows the CCI to enable and disable the timeclock.
  - Scene Lockout: Prevents the user from making any changes to the control unit. The current scene will stay on until the CCI enables normal operation.
  - Save Never: Prevents any changes from being saved while the CCI is being used.
  - Disable CCI: The CCI will have no effect on the system and will not appear on the list of available sensors.

Security Lockout Password

- A 4-digit password (using characters A to Z and 0 to 9) can be enabled/disabled to lock out access to the Programming Menu.
- By default there is no password enabled on the GRAFIK Eye QS control unit.
- If the 4-digit password is forgotten, contact Lutron Customer Assistance to regain access.

Job Name:	Model Numbers:
Job Number:	

Specifications *(continued)*

Remote Zone Mapping

- Map a GRAFIK Eye QS zone directly to an Energi Savr Node output so that programmed scenes in the GRAFIK Eye QS control unit will directly control the output levels of the Energi Savr Node.
- Adjust high-end and low-end trim for remote zones through the Energi Savr Node or Energi Savr app software.
- Change load types of remote zones through the Energi Savr Node or Energi Savr app software.
- Configure daylighting for remote zones through the Energi Savr Node or Energi Savr app software.
- Required:
  - GRAFIK Eye QS control unit with firmware version 7.000 or higher
  - Energi Savr Node unit with firmware version 6.000 or higher
  - Energi Savr app version 6.0.0 or higher (required only if the Energi Savr Node unit has been configured using the app)

Partitioning

- When partition is open, creating one large space, automatically combines lighting preset functions for multiple GRAFIK Eye QS control units.
- When partition is closed, creating two or more smaller spaces, lighting preset functions become independent.
- Requires one QSWS2-2B wallstation, a GRX-IRPS infrared transmitter/receiver pair, and a GRX-12VDC power supply for operation.
- If occupancy sensors are required in a partitioned space, note that each room's occupancy sensor(s) will operate independent of the partition status.

Job Name:	Model Numbers:
Job Number:	

Capacities

	220 - 240 V∼ 50/60 Hz	120 - 127 V∼ 50/60 Hz
Unit Capacity (watts)	3000	2000
MLV	3000 VA/2400 W	2000 VA/1600 W
Zone Capacity (watts)	40 – 1200	25 – 800
MLV	40 – 1200 VA/40 – 960 W	25 – 800 VA/25 – 600 W

Load Type Notes (Zones 1, 2 and 3)

- All electronic low-voltage (ELV) lighting used with an interface must be rated for reverse phase control dimming. Before installing an ELV light source, verify with the manufacturer that their transformer can be dimmed. When dimming, an ELV interface (such as the PHPM-PA-DV-WH) must be used with the control unit.
- Not all zones must be connected; however, connected zones must have a minimum load as specified above.
- Maximum total lighting load for a magnetic low-voltage (MLV) varies by input voltage:
  – 120 - 127 V∼: 800 VA/600 W
  – 220 - 240 V∼: 1200 VA/960 W
- Maximum total lighting load for Lutron Tu-Wire and Advance Mark 10® electronic dimming ballasts (120 to 127 V∼ only) must not exceed 6 A per zone or 16 A per unit.
- No zone may be loaded with more than the capacity specified above. For higher wattage applications, or for 277 V∼ applications, use Lutron power module PHPM-PA, PHPM-WBX, PHPM-PA-DV, PHPM-SW, or PHPM-WBX-DV.
- For controlling low-wattage loads (CFL, LED) in a non-dim application, contact Lutron Technical Support for the appropriate solution.

System Limits

- The QS wired communication link is limited to 100 devices or 100 zones.

Job Name:	Model Numbers:
Job Number:	

GRAFIK Eye QS Wireless with EcoSystem
Standard Model Numbers

See following pages for Ordering Standard and Custom (Non-Standard) Model Numbers
See Standard Color Combinations page for faceplate, stripe, and button colors

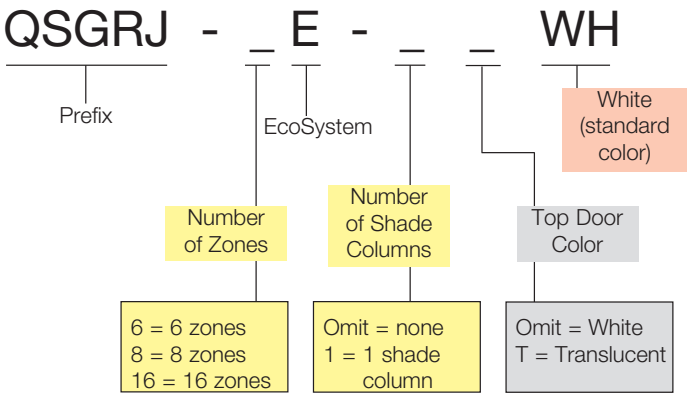

Example:
QSGRJ-6E-1TWH
6-zone standard white unit with 1 shade column and translucent top door.

Unit will ship unengraved with engraving certificate that customer can redeem at no charge.

Available Standard Model Numbers

6 Zones	8 Zones	16 Zones
QSGRJ-6E-WH	QSGRJ-8E-WH	QSGRJ-16E-WH
QSGRJ-6E-TWH	QSGRJ-8E-TWH	QSGRJ-16E-TWH
QSGRJ-6E-1WH	QSGRJ-8E-1WH	QSGRJ-16E-1WH
QSGRJ-6E-1TWH	QSGRJ-8E-1TWH	QSGRJ-16E-1TWH

Important Note:

For any standard and non-standard engraved units, you must order **BOTH** a base unit and a Faceplate Kit.
Please see the Standard/Custom Engraved Ordering Information on the following pages.

Job Name:	Model Numbers:
Job Number:	

GRAFIK Eye QS Wireless with EcoSystem *(continued)*

Standard Color Options and Model Numbers

You must order a Base Unit and a Faceplate Kit

See Standard Color Combinations page for faceplate, stripe, and button colors

Base Unit

QSGRJ - _ E

- QSGRJ: Prefix
- _: Number of Zones
  - 6 = 6 zones
  - 8 = 8 zones
  - 16 = 16 zones
- E: EcoSystem

Example:

QSGRJ-6E
6-zone base unit
and
QSGFP-2IV-EGN
Ivory faceplate kit with two shade columns and general engraving

Standard Engraved Faceplate Kit

(includes coordinating stripe and buttons)

QSGFP - _ _ WH - _

- QSGFP: Faceplate Prefix
- _: Number of Shade Columns
  - Omit = none
  - 1 = 1 column
  - 2 = 2 columns
  - 3 = 3 columns
- _: Top Door Color
  - Omit = same as unit
  - T = Translucent
- _: Keypad Engraving Code

Keypad Engraving Codes

- -G = Generic
- -S = Shades
- -H = Hotel Room
- -A = Auditorium
- -L = Lobby
- -R = Restaurant
- -M = Meeting Room
- -B = Ballroom
- -Z = Zone Toggle

Job Name:	Model Numbers:
Job Number:	

GRAFIK Eye QS Wireless with EcoSystem *(continued)*

Standard Engraved Faceplate Kit (WH only) *(continued)*

Generic (-G)

1
2
3
4
Off

Meeting Room (-M)

All On
Meeting
A/V
Cleaning
All Off

Shades (-S)

Open
Preset 1
Preset 2
Preset 3
Close

Ballroom (-B)

All On
Event 1
Event 2
Event 3
All Off

Hotel Room (-H)

High
Medium
Low
Nightlight
Off

Zone Toggle (-Z)

Zone 1
Zone 2
Zone 3
Zone 4
Zone 5

Auditorium (-A)

All On
Present
Lecture
Exam
All Off

Lobby (-L)

All On
Morning
Afternoon
Evening
All Off

Restaurant (-R)

All On
Breakfast
Lunch
Dinner
All Off

* Standard engraving text does not automatically assign or re-assign system programming to the QS keypad buttons. Project-specific customer input and programming by a Lutron service team member is still required to achieve a desired sequence of operation/system functionality per control.

Job Name:	Model Numbers:
Job Number:	

GRAFIK Eye QS Wireless with EcoSystem *(continued)*

Custom Color Options and Model Numbers

You must order a Base Unit and a Faceplate Kit

See Standard Color Combinations page for faceplate, stripe, and button colors

Custom (non-standard) Faceplate Kit

(includes coordinating stripe and buttons)

QSGFP - - -

- Faceplate Prefix
- Number of Shade Columns
- Top Door Color
- Color/Finish
- Keypad Engraving Code

Omit = none
1 = 1 column
2 = 2 columns
3 = 3 columns

Omit = same as unit
T = Translucent

Faceplate Custom Color/Finish Codes

Architectural Matte Finishes

Standard (ship in 48 hours)

White	WH
Ivory	IV
Beige	BE
Gray	GR
Brown	BR
Black	BL
Almond	AL
Light Almond	LA

Architectural Metal Finishes

Bright Brass	BB
Bright Chrome	BC
Bright Nickel	BN
Satin Brass	SB
Satin Chrome	SC
Satin Nickel	SN
Antique Brass	QB
Antique Bronze	QZ

Anodized Aluminum Finishes

Clear	CLA
Black	BLA
Brass	BRA

Satin Color Matte Finishes

Snow	SW
Midnight	MN
Taupe	TP
Biscuit	BI
Eggshell	ES
Palladium	PD
Hot	HT
Merlot	MR
Plum	PL
Sienna	SI
Terracotta	TC
Bluestone	BG
Greenbriar	GB
Goldstone	GS
Mocha Stone	MS
Stone	ST
Desert Stone	DS
Limestone	LS

For the latest color offerings please see our website:
http://www.lutron.com/satincolors

Keypad Engraving Codes

Omit = Unengraved
Ships with engraving certificate that customer can redeem at no charge

EGN = General Engraving

Lighting keypad

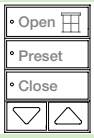

Shade column

NST = Non-Standard Text Engraving
Please visit the GRAFIK Eye QS website at **www.lutron.com/grafikeyeqs** for custom engraving forms. Submit completed form with order, and unit will ship engraved as specified by customer.

Job Name:	Model Numbers:
Job Number:	

GRAFIK Eye QS Wireless with EcoSystem *(continued)*

Custom Options and Model Numbers *(continued)*

See previous pages for Standard and Other Custom Model Numbers
See Standard Color Combinations page for faceplate, stripe, and button colors

Custom Button Kit

QSGB - 5B - WH -

- QSGB: Custom Button Kit Prefix
- 5B: Button Configuration
- WH: Button Color/Finish
- Keypad Engraving Code

3BRL = 3-button with raise/lower (shade column)
5B = 5-button (lighting keypad)

Button Kit Custom Color/Finish Codes

Architectural Matte Finishes		Satin Color Matte Finishes	
White	WH	Snow	SW
Ivory	IV	Biscuit	BI
Beige	BE	Eggshell	ES
Gray	GR	Taupe	TP
Brown	BR		
Black	BL		
Almond	AL		
Light Almond	LA		

Keypad Engraving Codes

Omit = Unengraved
Ships with engraving certificate that customer can redeem at no charge

EGN = General Engraving

Lighting keypad

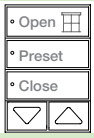

Shade column

NST = Non-Standard Text Engraving
Please visit the GRAFIK Eye QS website at **www.lutron.com/grafikeyeqs** for custom engraving forms. Submit completed form with order, and unit will ship engraved as specified by customer.

Custom Stripe Kit

QSGS - WH

- QSGS: Stripe Kit Prefix
- WH: Stripe Color/Finish

Stripe Custom Color/Finish Codes
Same as Faceplate colors on previous page

Job Name:	Model Numbers:
Job Number:	

GRAFIK Eye QS Wireless with EcoSystem *(continued)*

Standard Color Combinations

See previous pages for Standard and Custom Model Numbers

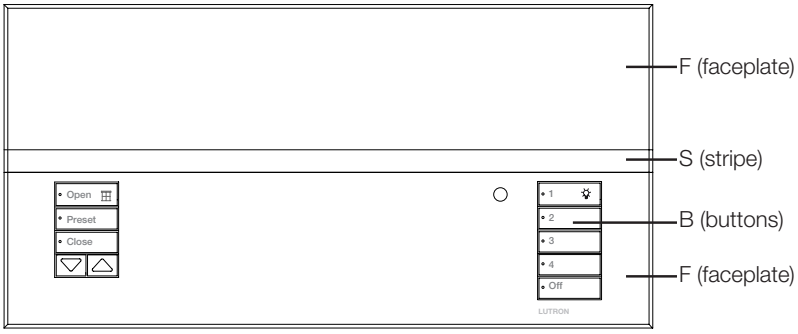

Faceplate is comprised of a top and bottom. The bottom will always be the color indicated under "faceplate." The top may be the same color or translucent. Use the chart for faceplates that have the same color top and bottom. If a translucent lid is chosen, the stripe will automatically be the same color as the bottom lid.

Example:
If you order QSGRJ-6E-1WH, your GRAFIK Eye QS with 6 lighting zones and 1 shade column will come with a white faceplate (both top and bottom), gray stripe, and white buttons.

Suffix	Faceplate (F)	Stripe (S)	Button (B)
Architectural Matte			
WH	White	Gray	White
IV	Ivory	Beige	Ivory
BE	Beige	Ivory	Beige
GR	Gray	Black	Gray
BR	Brown	Black	Brown
BL	Black	Gray	Black
AL	Almond	Light Almond	Almond
LA	Light Almond	Almond	Light Almond
Architectural Metal			
BB	Bright Brass	Black	Black
BC	Bright Chrome	Black	Black
BN	Bright Nickel	Black	Black
SB	Satin Brass	Black	Black
SC	Satin Chrome	Black	Black
SN	Satin Nickel	Black	Black
QB	Antique Brass	Black	Black
QZ	Antique Bronze	Black	Black
Anodized			
CLA	Clear	Black	Black
BLA	Black	Black	Black
BRA	Brass	Black	Black

Suffix	Faceplate (F)	Stripe (S)	Button (B)
Satin Matte			
SW	Snow	Gray	Snow
MN	Midnight	Gray	Black
TP	Taupe	Gray	Taupe
BI	Biscuit	Eggshell	Biscuit
ES	Eggshell	Beige	Eggshell
PD	Palladium	Gray	Gray
HT	Hot	Taupe	Taupe
MR	Merlot	Taupe	Taupe
PL	Plum	Taupe	Taupe
SI	Sienna	Brown	Brown
TC	Terracotta	Taupe	Taupe
BG	Bluestone	Gray	Gray
GB	Greenbriar	Gray	Gray
GS	Goldstone	Ivory	Ivory
MS	Mocha Stone	Taupe	Taupe
ST	Stone	Gray	Gray
DS	Desert Stone	Taupe	Taupe
LS	Limestone	Gray	Gray

For the latest color offerings please see our website:
http://www.lutron.com/satincolors

Job Name:	Model Numbers:
Job Number:	

Overview

Terminations

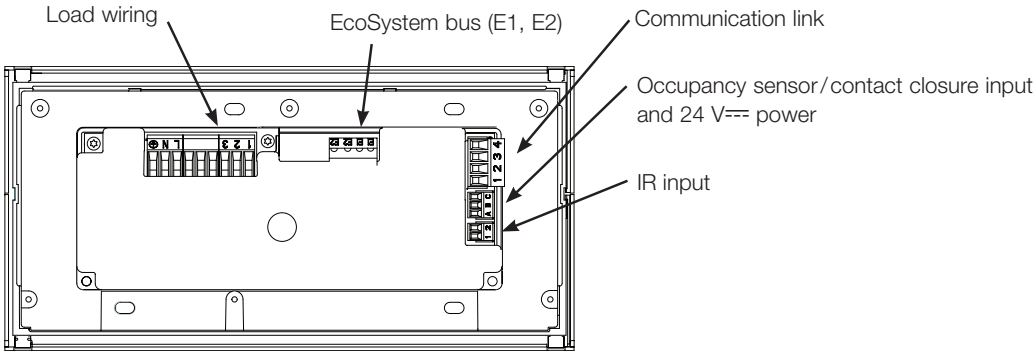

Wire Gauge	Maximum EcoSystem Bus Length
12 AWG (4.0 mm^2)	2200 ft (671 m)
14 AWG (2.5 mm^2)	1400 ft (427 m)
16 AWG (1.5 mm^2)	900 ft (275 m)
18 AWG (1.0 mm^2)	570 ft (175 m)

Power Group Wiring Example

On the QS link, there are devices that supply power and devices that consume power. Each device has a specific number of Power Draw Units (PDUs) it either supplies or consumes. A Power Group consists of one device that supplies power and one or more devices that consume power; each Power Group may have only one power-supplying device. Refer to the **Power Draw Units on the QS Link** Spec (369405) on www.lutron.com for more information concerning PDUs.

Within Power Groups on the QS link, connect all 4 terminals (1, 2, 3, and 4), shown by the letter A in the diagram. Between devices on the QS link that supply power, connect only terminals 1, 3, and 4 (NOT terminal 2), shown by the letter B on the diagram.

Wiring can be T-tapped or daisy-chained.

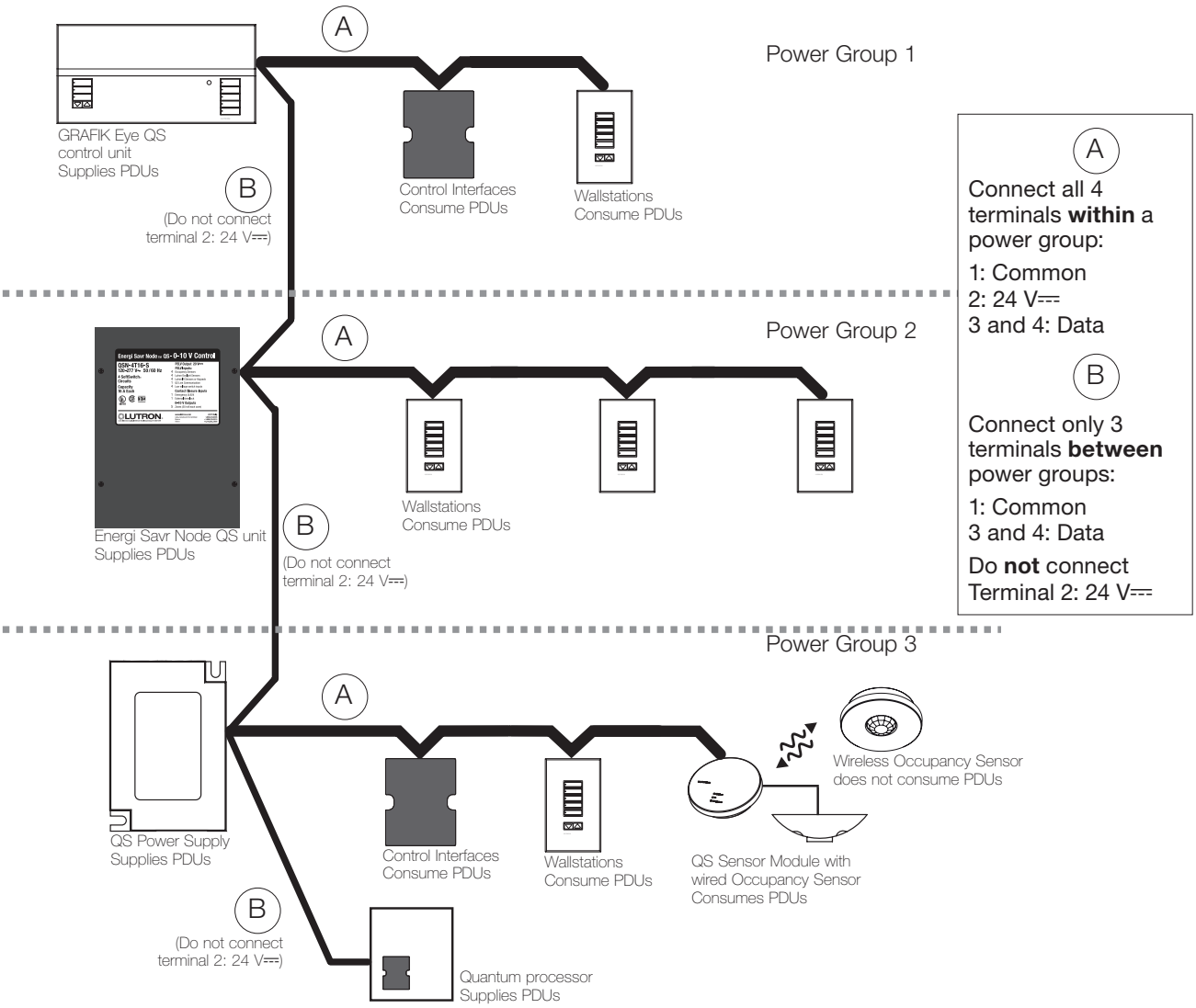

Job Name:	Model Numbers:
Job Number:	

Line Voltage Wiring

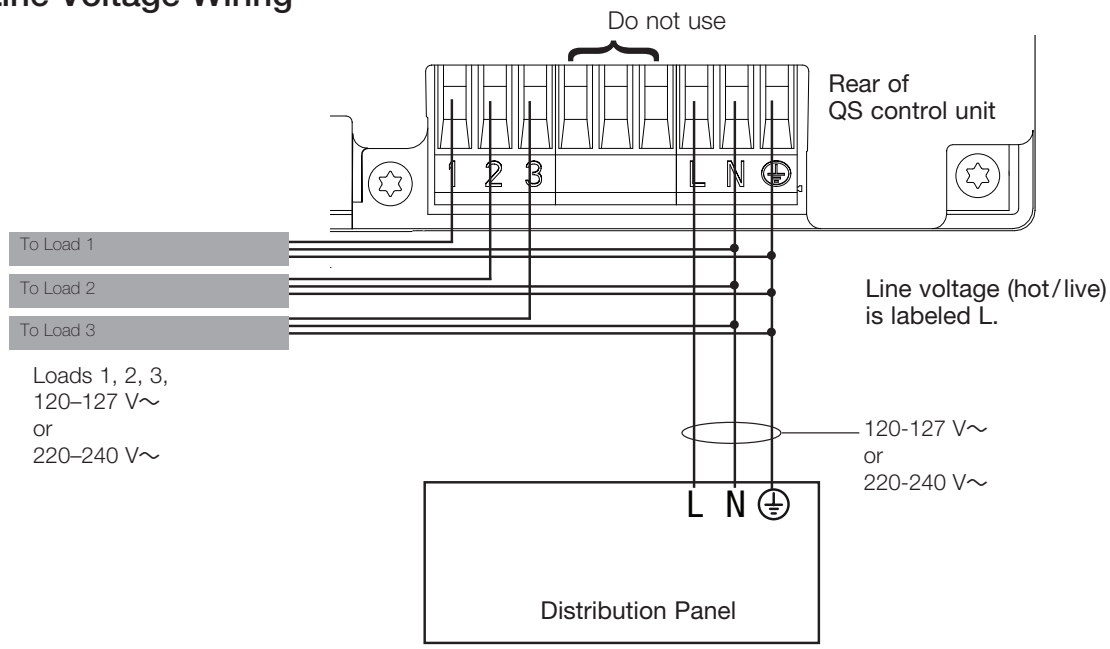

- Pull power wiring from distribution panel and to light fixtures.
- Each line voltage terminal can accept one 12 AWG (4.0 mm^2) wire.
- Consult Lutron for non-dim relay wiring and/or load side emergency transfer wiring.

Job Name:	Model Numbers:
Job Number:	

EcoSystem Bus Wiring

EcoSystem Bus Link Terminal Detail

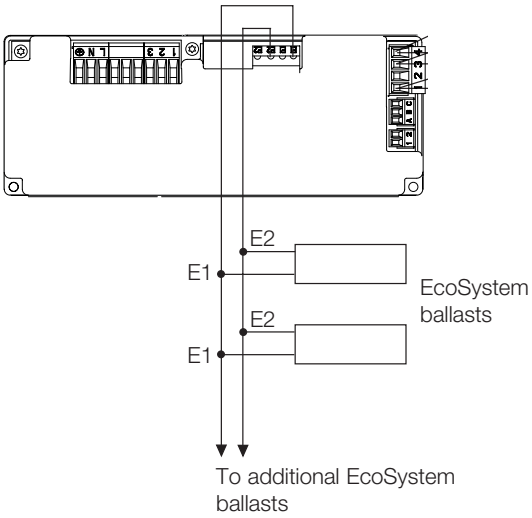

EcoSystem Bus Wiring Example

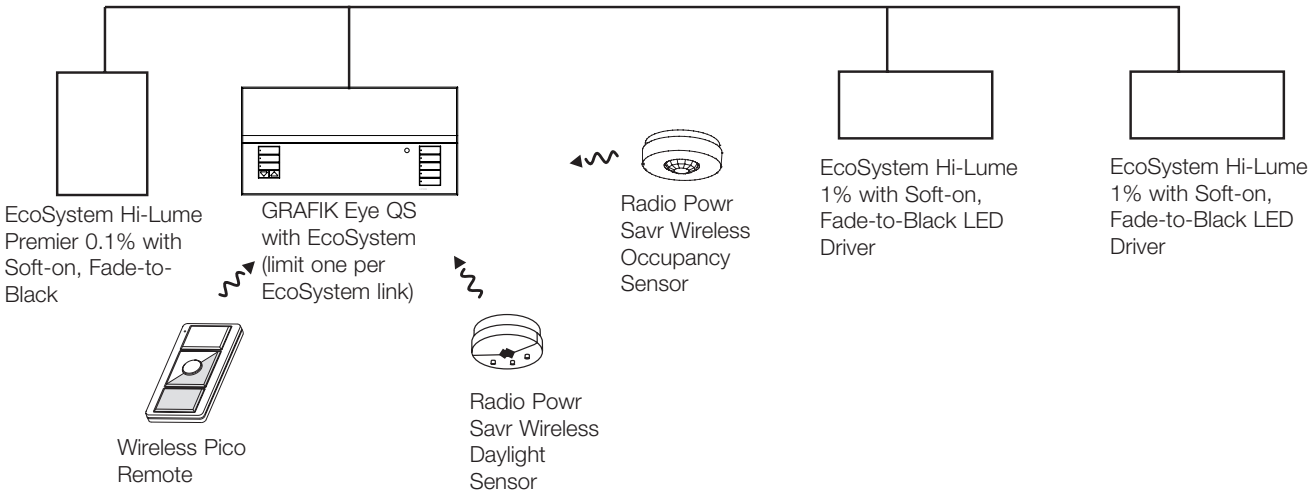

Job Name:	Model Numbers:
Job Number:	

IEC PELV/NEC® Class 2 QS System Wiring

- Wiring can be daisy-chained or T-tapped.
- Wiring must be run separately from line/mains voltage.
- Total length of control link must not exceed 2000 ft (610 m).

Wire Sizes (check compatibility in your area)

QS Link Wiring Length	Wire Gauge	Lutron Cable Part Number
Less than 500 ft (153 m)	Power (terminals 1 and 2) 1 pair 18 AWG (1.0 mm^2)	GRX-CBL-346S (non-plenum) GRX-PCBL-346S (plenum)
	Data (terminals 3 and 4) 1 twisted, shielded pair 22 AWG (0.5 mm^2)	
500 to 2000 ft (153 to 610 m)	Power (terminals 1 and 2) 1 pair 12 AWG (4.0 mm^2)	GRX-CBL-46L (non-plenum) GRX-PCBL-46L (plenum)
	Data (terminals 3 and 4) 1 twisted, shielded pair 22 AWG (0.5 mm^2)	

Daisy-Chain Wiring Example

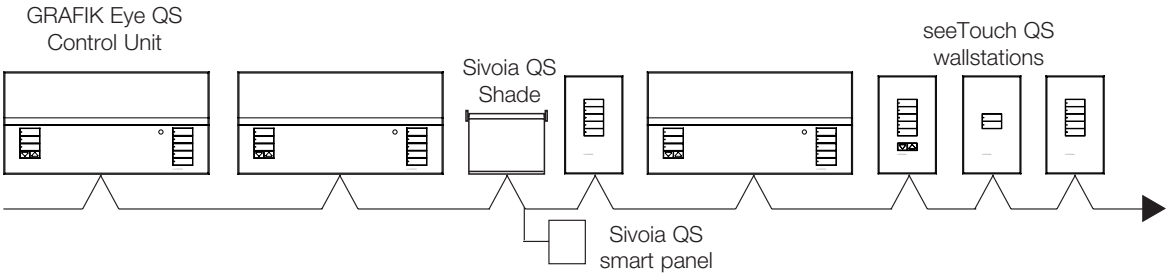

T-Tap Wiring Example

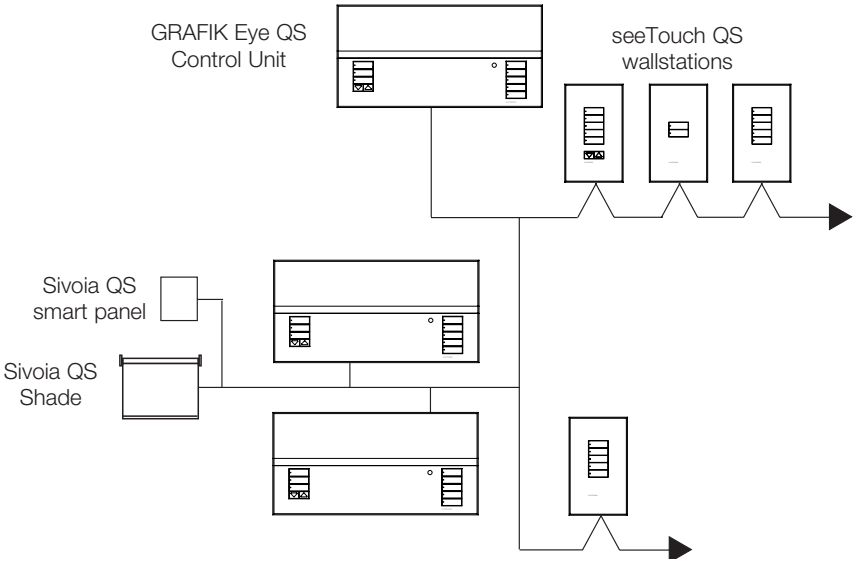

Job Name:	Model Numbers:
Job Number:	

Mounting

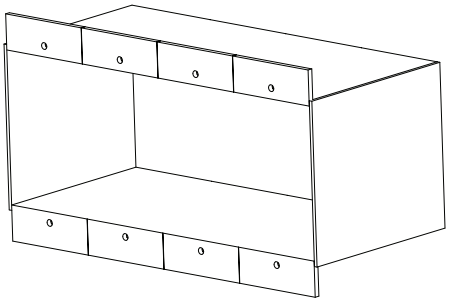

Fits into a 4-gang
U.S. backbox,
3½ in (90.4 mm) deep
(Lutron P/N 245-254)
or
3 in (76.2 mm) deep
(Lutron P/N 241-400)

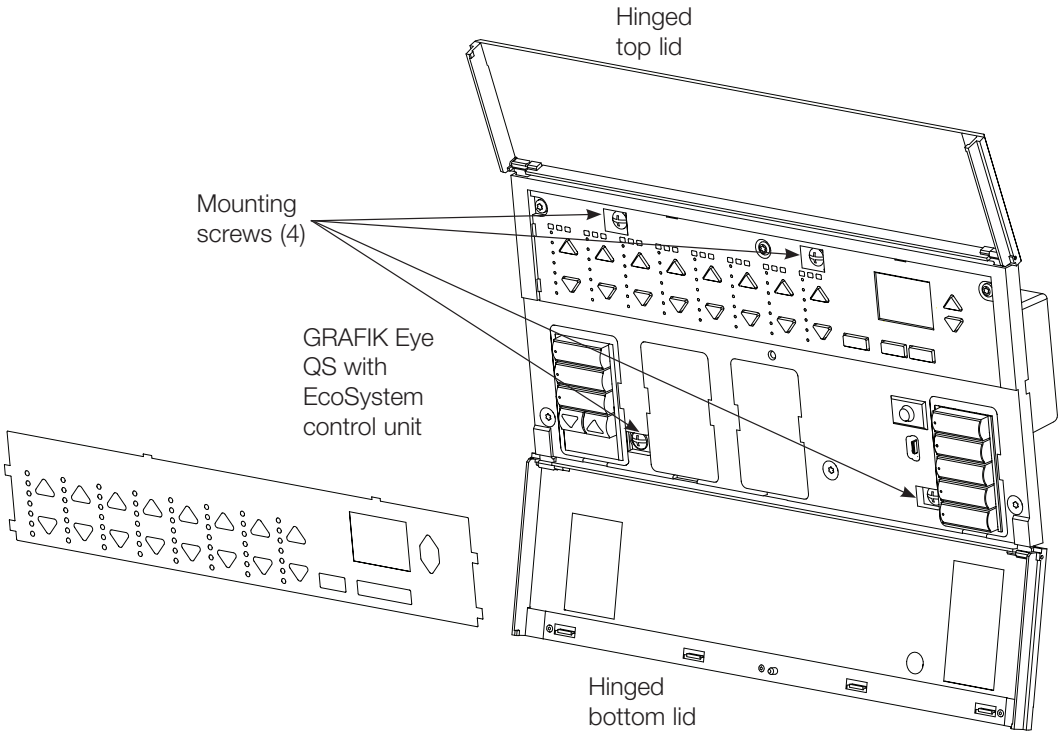

Lutron, Lutron, GRAFIK Eye, Sivoia, Pico, Quantum, seeTouch, Clear Connect, Hi-lume, Softswitch, RTISS Equipped, Tu-Wire, EcoSystem, Radio Powr Savr, Energi Savr Node, and RadioRA2 are trademarks or registered trademarks of Lutron Electronics Co., Inc. in the US and/or other countries.

NEC is a registered trademark of National Fire Protection Association, Quincy, Massachusetts.

UL is a trademark of UL LLC.

Advance and Mark 10 are registered trademarks of Philips Electronics North America Corporation.

Job Name:	Model Numbers:	
Job Number:		